Infrared Fiber Tester Pro

Description:

The Infrared Fiber Tester Pro is mainly used for checking the signal output power of the optical communication equipment in fiber optic networks. It measures the average power of a continuous light beam which emits from the equipments or other optic sources. It measures power in both 850nm/1300nm (Multi-Mode) and 1310nm/1550nm (Single-Mode) respectively.

The Infrared Fiber Tester Pro consists of a solid state InGas photodiode, signal power measurement circuitry, and a 2 digit LED display. Users just connect a fiber cable between the transmission port of the equipment and the universal interface on the Infrared Fiber Tester Pro. (Or connect to other light source) The product will show the exact amount of the received power value (in -dBm).The test ranges are - 30dBm ~ -15dbm in wavelength 850nm/1300nm and - 30dBm ~ -6dBm in wavelength 1310nm/1550nm.

The universal connector can be used for all the most common fiber interfaces such as ST/ SC/ FC / FDDA and it also suitable to test both single mode and multi mode cables. With an optional 2.5mm to 1.25mm adapter, users can even test for 1.25 fiber cables.

The Infrared Fiber Tester Pro can operate in coordination with Hobbes item 257813 or most other fiber sources to be a complete fiber test kit.

The correspondence of power in -dBm and mW can be consulted by the following forms:

-dBm	μW	-dBm	μW
-30	1	-17	19.9
-29	1.3	-16	25.1
-28	1.6	-15	31.6
-27	2.0	-14	39.8
-26	2.5	-13	50.1
-25	3.2	-12	63
-24	4.0	-11	79.4
-23	5.0	-10	100
-22	6.3	-9	125
-21	7.9	-8	158
-20	10	-7	199
-19	12.5	-6	251
-18	15.8		

Infrared Fiber Tester Pro

User Manual

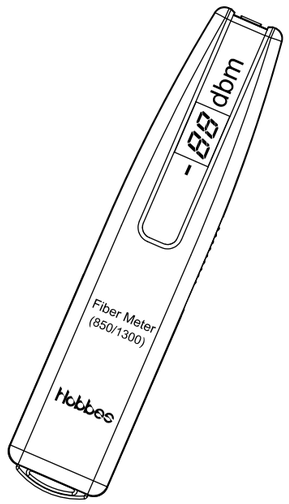

CT-09-81

Specifications:

Wavelength	850nm/1300nm For 257135 1310nm/1550nm For 257136
Fiber power range	-30dBm ~ -15dBm For 257135 -30dBm ~ -6dBm For 257136
Battery	AAA 1.5V X 2
Scale	-1dBm
Fiber connector	Universal type
Display	2 digit LED
Operating temp	0℃ ~ 50℃
Storage temp	0℃ ~ 70℃

Operation instructions:

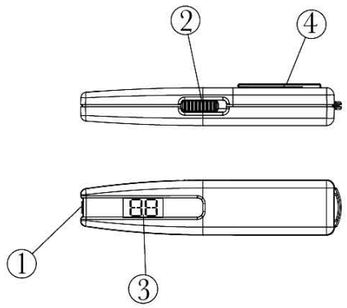

1. The dustproof (a universal type fiber connector inside)
2. The selection slide switch: 1300nm /8500nm /Power Off (1550nm/13100nm/Power off)
3. The 2 digits receiving power indicator
4. Pen-clip

1. Unit is powered by two 1.5V AAA batteries.
2. Lift the front dustproof up and insert one end of the fiber cable to the universal connecter or direct insert to an output connector of fiber devices or Power Source.
3. Switch the slide switch to 850nm or 1300nm position (The multi-mode model) or 1310nm/1550nm (Single-Mode model). The numeric LED will show the actual receiving power in-dbm.

4. The " Lo " will display when actual receiving power is under - 30dbm, the " Hi " is displayed when receiving power is higher than-15dbm (850nm/1300nm) or -6dbm (1310nm/1550nm).
5. To calculate the power loss of a fiber cable, you need a steady power source. For example, the output power is -26dbm after a Fiber cable and -20dbm when tested directly from the power source, -20dbm - (-26dbm) =6dbm loss.
6. When the LED's show " - -", it means the batteries are drained and should be replaced immediately.
7. Don't touch the fiber's surface to avoid the dirt, moisture and oil from your fingers. It's important to keep the fiber clean and avoid touching the glass before test.
8. Keeping the tester's fiber connector capped at all times when not in use.
9. Cleaning the fiber before test in order to get proper results and lengthen the service life.

Model number

257135 850nm/1300nm Pen style fiber meter for multi mode.

257136 1310nm/1550nm Pen style fiber meter for single mode.