REV.	DESCRIPTION	DATE
A		04-2015

RoHS

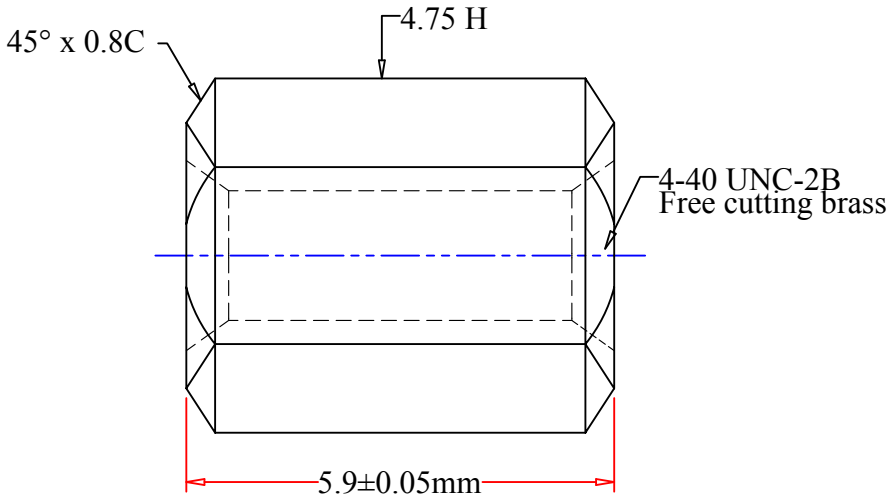

Screws are used with typical applications such VGA, DB-9, DB-25 connections. Screws can help assemble parts together or secure lock down when installing parts to monitors, computers, or several different types of machinery devices.

Features
Hex nut
5.90mm
100 pieces per bag

ITEM NUMBER	30D1-02450			DRAWER	JL
TITLE	Hex Nut, # 4 - 40, 100 Pieces, 5.9mm			CHECKED	
				APPROVED	
MATERIAL		SCALE			
REV.	A	UNIT	MM		
DRAWING NO:					
ID(NO.)	19				

888-212-8295 CableWholesale.com