8212-50008

Instruction Manual

VESA50/75/100/200mm

20kgs/44lbs

TV to Wall: Min.: 96mm Max.: 456mm

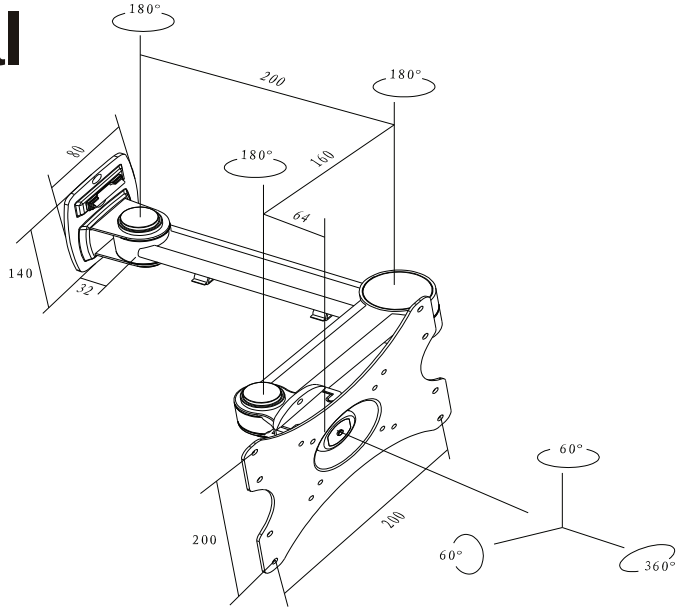

Ⓐ		x4	Ⓑ	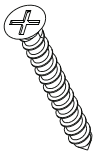 M6x65	x3	Ⓒ	∅ 10x50	x3	Ⓓ	M4x4	x2	Ⓔ	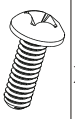 M4x12	x4	Ⓕ	M5x12	x4	Ⓖ	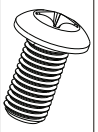 M6x12	x4

1a

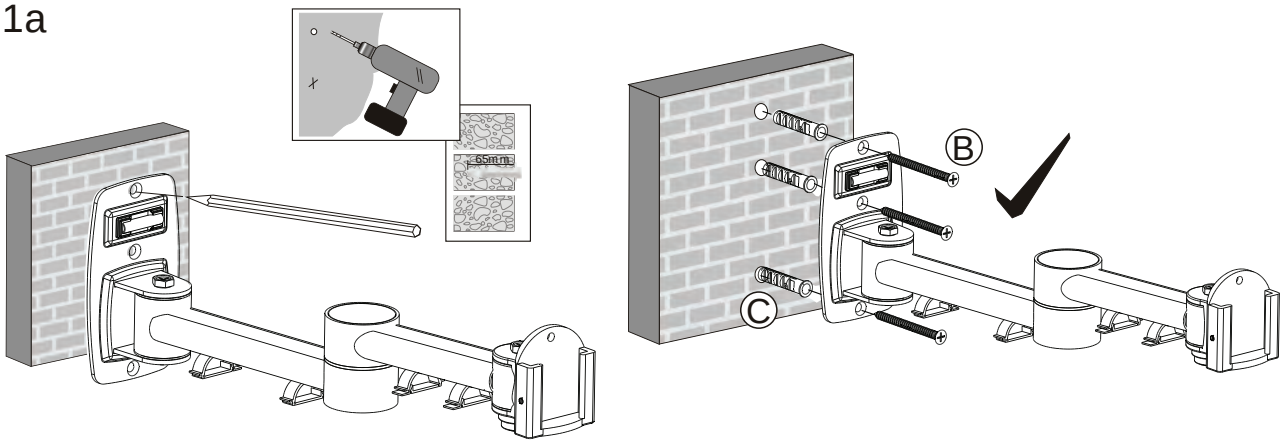

1b

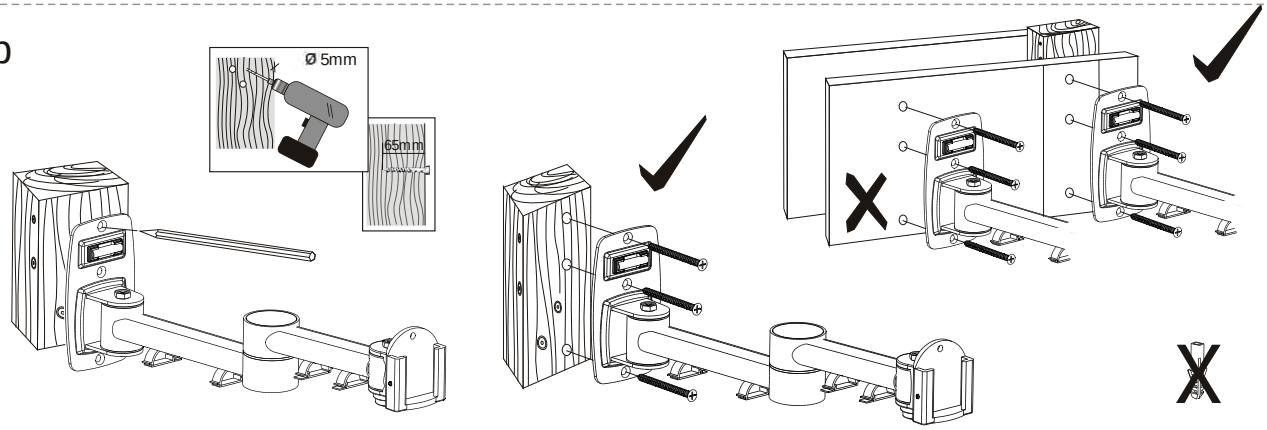

2

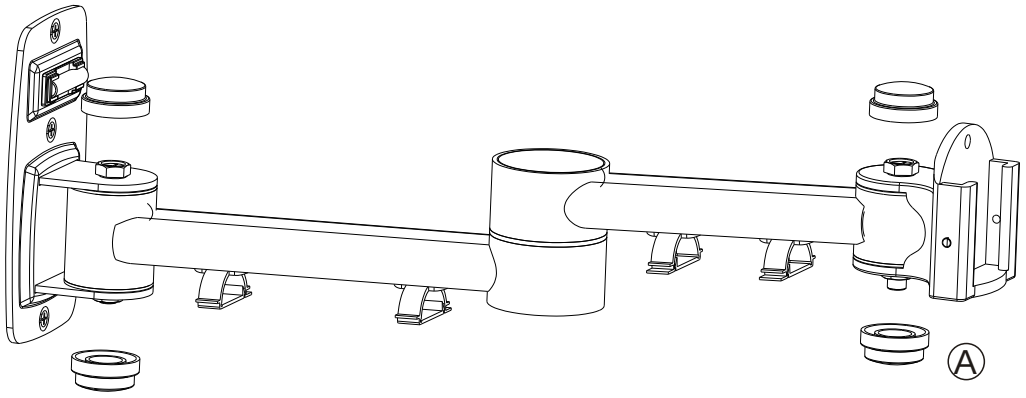

3

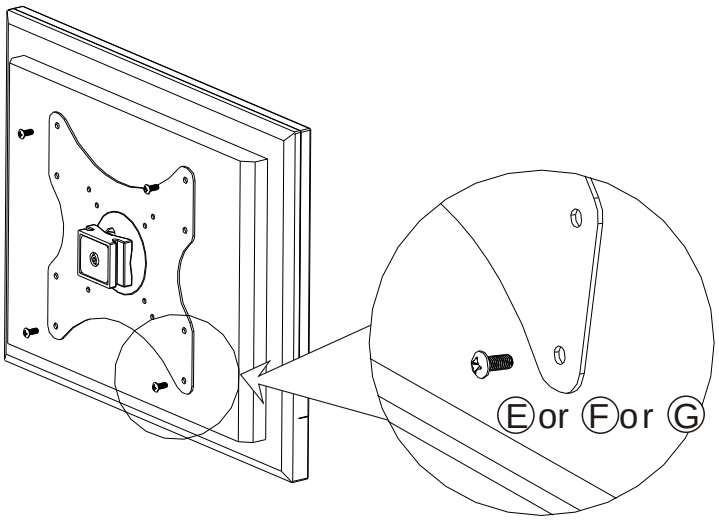

4

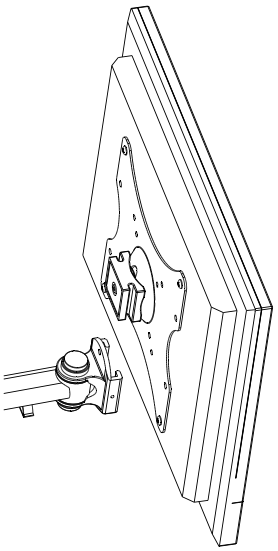

5

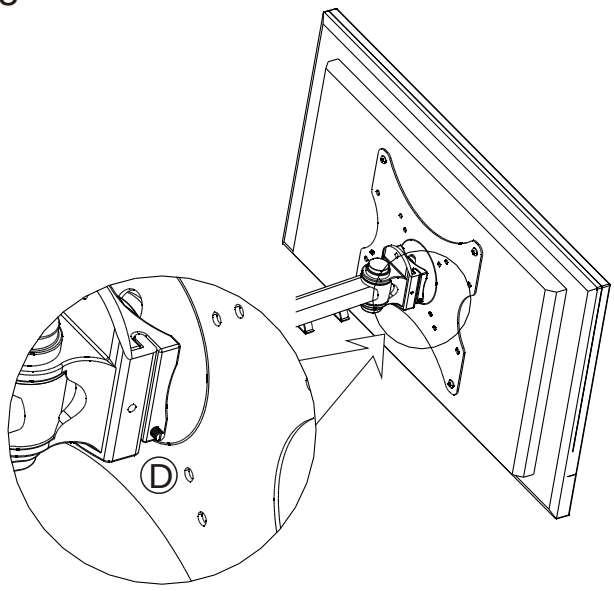

6

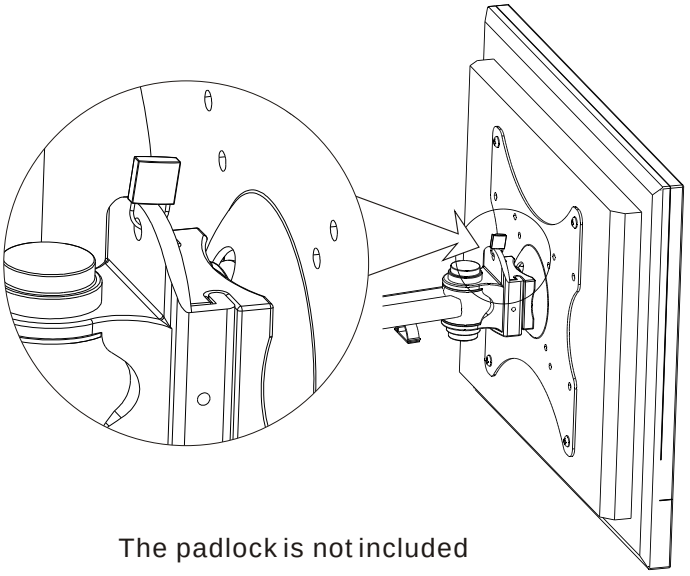

The padlock is not included