Rev.	Description	Date
A		10-2018

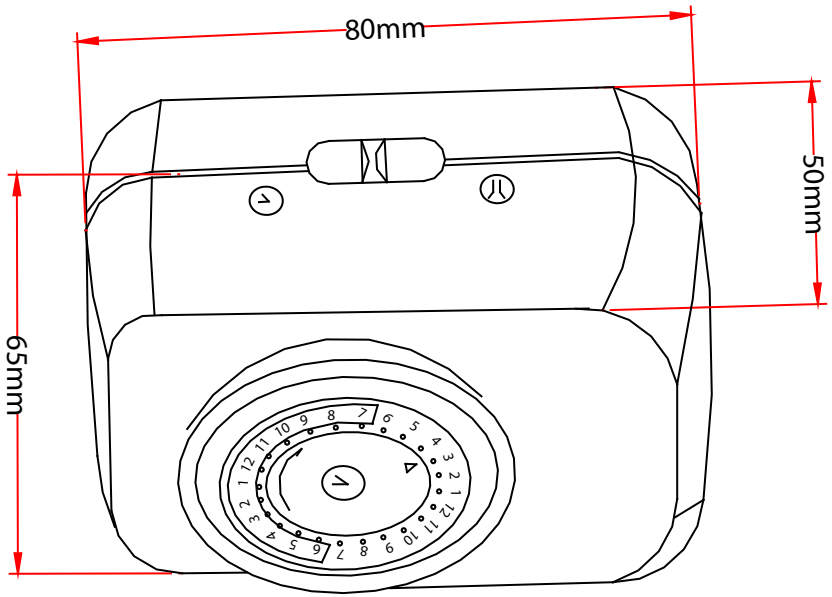

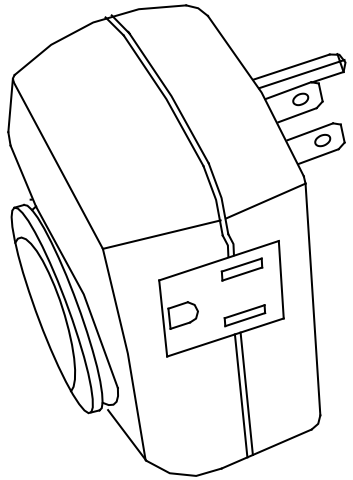

Feature:
* Single 3-prong grounded outlet
* Turns on/off automatically appliances, lamps, electrical devices
* 24 Hour cycle with 1/2hour on/off setting
* Can be set in 30 minute intervals
* Programming repeats daily
* Convenient override switch
* Dimensions; 80(H) x 65(W) x 50mm(D)

RoHS

Rating :
* 125VAC 60Hz
* 15 A Resistive. 15A General Use. 1875 W Tungsten
* 500 VA Electronic Ballast
* UL/cUL LISTED

No.	Specifications

Item Number:	30W1-42300	
Title:	Mechanical Timer 24 Hour with Single 3-Prong Outlet - UL Rated	
Drawn by:	JL	888-212-8295 CableWholesale.com
Approved by:	MAC	
ID:	108	