Rev.	Description	Date
A		11-2018

RoHS

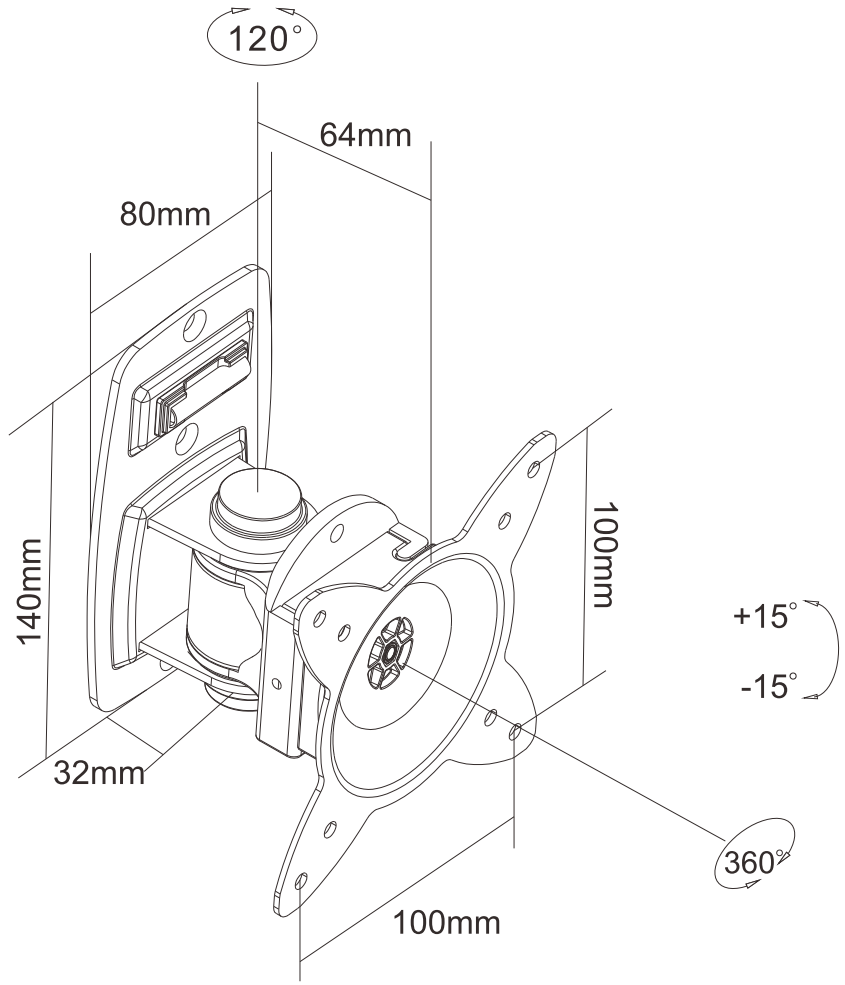

Package M

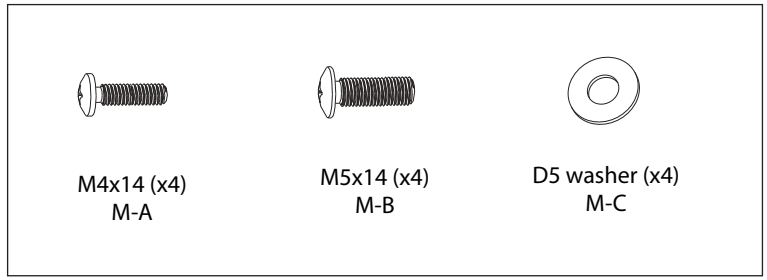

Package W

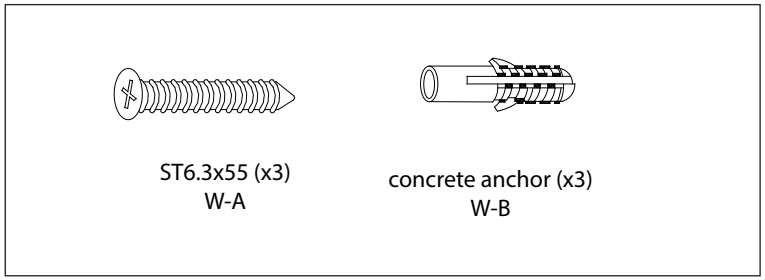

Notes:
Material: Aluminum, Steel, Plastic

Item Number:	8212-50006
Title:	TV Mount for 10 to 23 inch w/ 3.8 inch arm, 100mm VESA, Lockable
Drawn by:	JL
Approved by:	MAC
ID:	108

888-212-8295 CableWholesale.com

No.	Specifications