REV.	DESCRIPTION	DATE
A		09-2012

RoHS

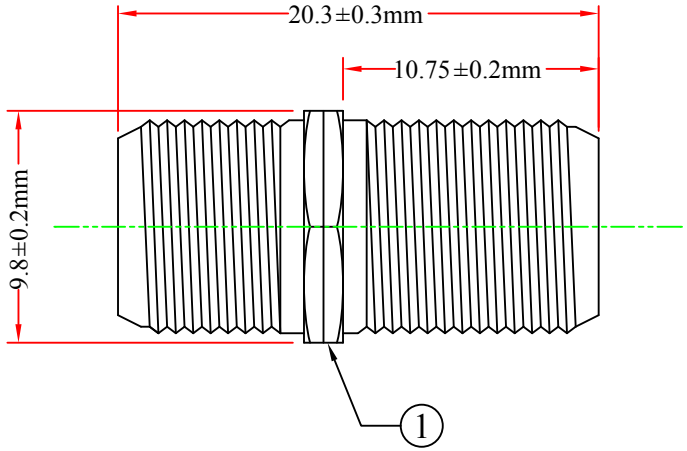

F-Pin (Coax) Coupler, Female / Female

3	
2	
1	F-Pin (Coax) Coupler, Female / Female, Nickel Plated
NO.	SPECIFICATIONS
BOM LIST	

ITEM NUMBER	ASF-20050			DRAWER	JL
TITLE	F-Pin (Coax) Coupler, Female / Female			CHECKED	
				APPROVED	
MATERIAL		SCALE			
REV.	A	UNIT	INCH		
DRAWING NO:					

888-212-8295 CableWholesale.com